Optical Fiber Connector Cleaner

CLETOP Station

Instruction Manual

Please read this manual carefully before using the product to ensure proper operation.

Table of Contents

1. Introduction 4
   1-1 Purpose of This Manual 4
   1-2 Safety Precautions 4
   1-3 Disclaimer 8
2. Product Overview 9
   2-1 About this Product 9
   2-2 Package Contents 9
   2-3 Names and Functions of Parts 11
      2-3-1 Front View 11
      2-3-2 Side View 12
      2-3-3 Rear View 13
3. Basic Operation and Settings 14
   3-1 Pre-Operation Check 14
   3-2 Startup Procedure 14
   3-3 Installing the Cartridge 16
   3-4 Cartridge Replacement Confirmation Screen 19
   3-5 Installing the Attachment 20
   3-6 Mode Settings 21
      3-6-1 Switching Cleaning Modes (DRY / WET) 21
      3-6-2 Switching Cleaning Intensity (NORMAL / HARD) 21
   3-7 Preparing for WET Mode 22
4. Basic Operation (Cleaning Procedure) 24
   4-1 Basic Cleaning Procedure 24
   4-2 Operating Tips by Mode 26
      4-2-1 DRY Mode 26
      4-2-2 WET Mode 26
   4-3 Precautions During Cleaning 27
   4-4 If the Unit Does Not Operate 27
5. Display and Status Indicators (LCD) 28
   5-1 Screen Overview 28
   5-2 Main Screen Layout 28
   5-3 Cartridge Remaining Level Indicator 29
   5-4 Operating Status Indicators 29
   5-5 Warning Indicators 29
6. Maintenance 30
   6-1 Maintenance Overview 30

6-2 Sensor Calibration 30
6-3 Cleaning the Ultrasonic Transducer 35
7. Troubleshooting 37
7-1 Operation Issues 37
7-2 WET Mode-Related Issues 37
7-3 Cartridge-Related Issues 38
7-4 If the Problem Persists 38
8. Specifications 39
8-1 Product Specifications 39
8-2 Compatible Connectors 40
8-3 Notes on Specifications 40
9. Warranty 40
10. Manufacturer Information 41

1. Introduction

1-1 Purpose of This Manual

This manual describes the proper operating procedures and maintenance methods for the CLETOP Station (hereinafter referred to as this Product).
To ensure safe and efficient use of this Product, please read this manual carefully before operating this Product.

1-2 Safety Precautions

Before using this Product, be sure to read and understand these Safety Precautions and use this Product correctly.
The precautions described in this section are intended to prevent injury to users and others, as well as damage to property, before it occurs.

⚠ **WARNING**	Indicates a hazardous situation which, if not avoided, could result in death or serious injury.
⚠ **CAUTION**	Indicates a hazardous situation which, if not avoided, may result in minor or moderate injury, or property damage.

Safety Symbols	
⃠	This symbol indicates an action that is prohibited.
❗	This symbol indicates an action that must be performed.

Handling the Main Unit

⚠	**WARNING**
⃠	**Do not attempt to disassemble or modify this product.** Doing so may cause fire, electric shock, or malfunction.
⃠	**Do not handle the main unit or power plug with wet hands.** Doing so may result in electric shock or equipment malfunction.
⃠	**Do not use any AC adapter other than the one supplied with this product.** Doing so may result in fire, electric shock, or equipment malfunction.
⃠	**Do not modify, excessively bend, twist, or place heavy objects on the power cord. If the power cord is damaged, discontinue use immediately.** Failure to comply with this instruction may result in fire, electric shock, or equipment malfunction.
⃠	**If you hear thunder, do not touch the unit or the power cord.** Doing so may cause electric shock.
⃠	**Do not overload electrical outlets or power strips.** Failure to comply with this instruction may result in fire, electric shock, or equipment malfunction.
⃠	**Keep hands and fingers away from rotating and sliding parts while the device is operating.** Failure to comply with this instruction may result in personal injury or equipment malfunction.
⃠	**Do not install or operate this Product in environments with excessive oil smoke, gas, steam, or dust.** Failure to comply with this instruction may result in fire or electric shock.
⃠	**Keep the power cord away from heaters and other heat-generating appliances.** Damage to the cord insulation may cause fire or electric shock.

	WARNING
	After completing daily operations, drain distilled water from the tank. If distilled water is left in the tank, mold may develop and the equipment may malfunction.
	Use only distilled water for WET cleaning. Do not use any other cleaning solution or liquid. Doing so may cause equipment malfunction.
	Install and operate this Product on a stable, level surface. Failure to do so may result in this Product falling or tipping over.
	Do not expose the device to water. Failure to comply with this instruction may result in electric shock or fire. If the device becomes wet, dry it thoroughly before use.
	If smoke or abnormal noise occurs, immediately switch off the device and disconnect the power plug. Failure to comply with this instruction may result in fire or equipment malfunction.

	CAUTION
	Always disconnect the power cord before moving the device. Failure to do so may damage the power cord and cause the equipment to malfunction.
	Always hold the plug when disconnecting the power cord from the outlet. Never pull on the cord itself. The power cord may be damaged, resulting in equipment malfunction.
	Disconnect the power cord from the electrical outlet when the device will not be used for a long period. Insulation deterioration may cause electric shock or an electrical leakage fire.
	Do not place objects on the device. Failure to comply with this instruction may result in equipment malfunction.
	Do not drop the device or expose it to excessive shock or impact. Failure to comply with this instruction may result in personal injury or equipment malfunction.
	Before transporting the device, be sure to drain all distilled water from the tank. Failure to drain distilled water before transport may result in equipment malfunction.

Operating Environment

CAUTION

To ensure proper performance and prevent equipment malfunction, use the device only under the operating conditions described below.

Installation Environment	Install the device on a stable, level surface. Install the device in a well-ventilated area. Do not install the device in direct sunlight. Do not install the device in locations exposed to oil smoke, gas, excessive humidity, or dust. Do not install the device in locations subject to frequent vibration. Do not install the device in locations where the temperature fluctuates significantly. Do not place any objects around the device.
Temperature and Humidity	Temperature: 10–30°C Relative Humidity: 30–70% RH (no condensation)

1-3 Disclaimer

We shall not be liable for any damage resulting from use of this Product in a manner other than that described in this Instruction Manual.

The contents of this manual are subject to change without prior notice.

2. Product Overview

2-1 **About this Product**

This product is designed to automatically clean the end faces of optical fiber connectors. It reduces the workload of operators while providing consistent and reliable cleaning quality.
Its main features are as follows:

- Automatic Cleaning of Optical Fiber Connectors
- Switchable DRY and WET Cleaning Modes
- Supports Multiple Connector Types with Interchangeable Attachments

---

2-2 **Package Contents**

The following items are included in the package.
If any accessories are missing, please contact your distributor or dealer.

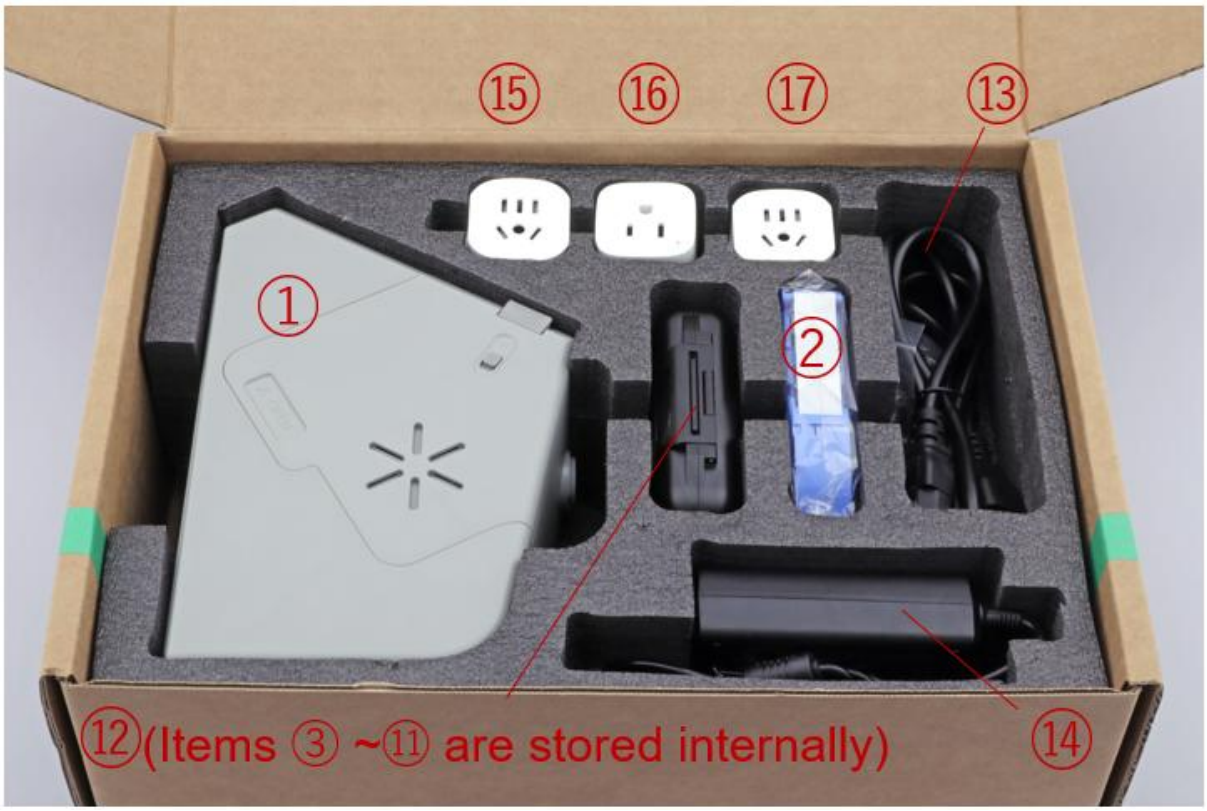

No.	Description	Qty.
1	CLETOP Station Main Unit	1
2	CLETOP-S Replacement Cartridge (White)	1
3	1.25 mm Ferrule Attachment	1
4	2.5 mm Ferrule Attachment	1
5	MT-PC Ferrule Attachment	1
6	MT-APC Ferrule Attachment	1
7	LC Connector Attachment	1
8	LC-Duplex Connector Attachment	1
9	SC Connector Attachment	1
10	MPO-PC Connector Attachment	1
11	MPO-APC Connector Attachment	1
12	Attachment Case	1
13	Power Cord (Type B)	1
14	AC Adapter	1
15	Type B to Type C Conversion Adapter	1
16	Type B to Type G Conversion Adapter	1
17	Type B to Type I Conversion Adapter	1
18	Quick Start Guide	1

2-3 Names and Functions of Parts

2-3-1 Front View

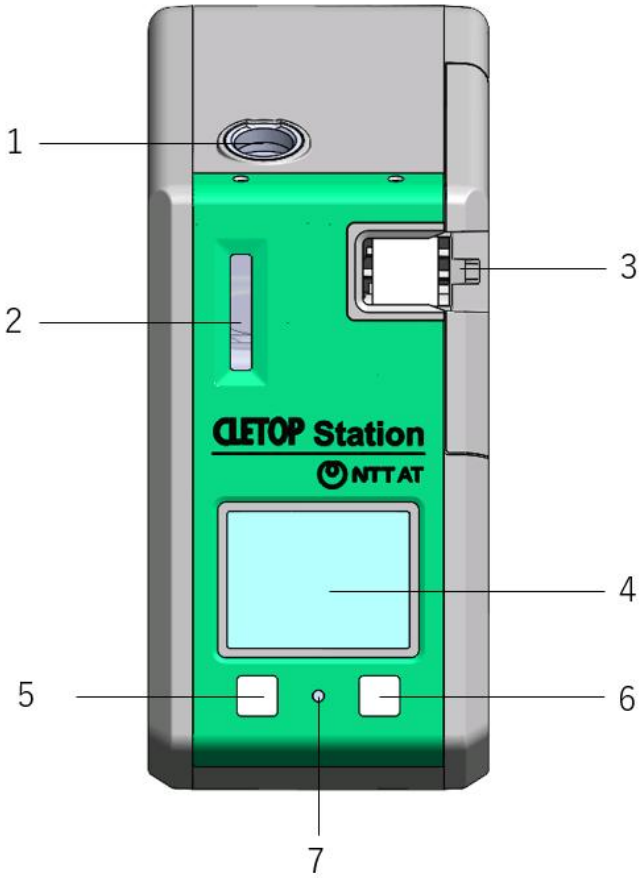

No.	Name	Description
1	Filling Port	Used for filling and draining distilled water.
2	Liquid Level Inspection Window	Used to check the liquid level in the tank.
3	Attachment Mount	Location where various attachments are installed.
4	LCD Display	Displays mode settings, attachment type, cleaning count, remaining capacity, and other status information.
5	A Button	Used to switch between DRY and WET cleaning modes.
6	B Button	Switches the cleaning intensity between NORMAL (Standard Cleaning) and HARD (Intensive Cleaning).
7	LED	Lights up while a cleaning operation is in progress.

2-3-2 Side View

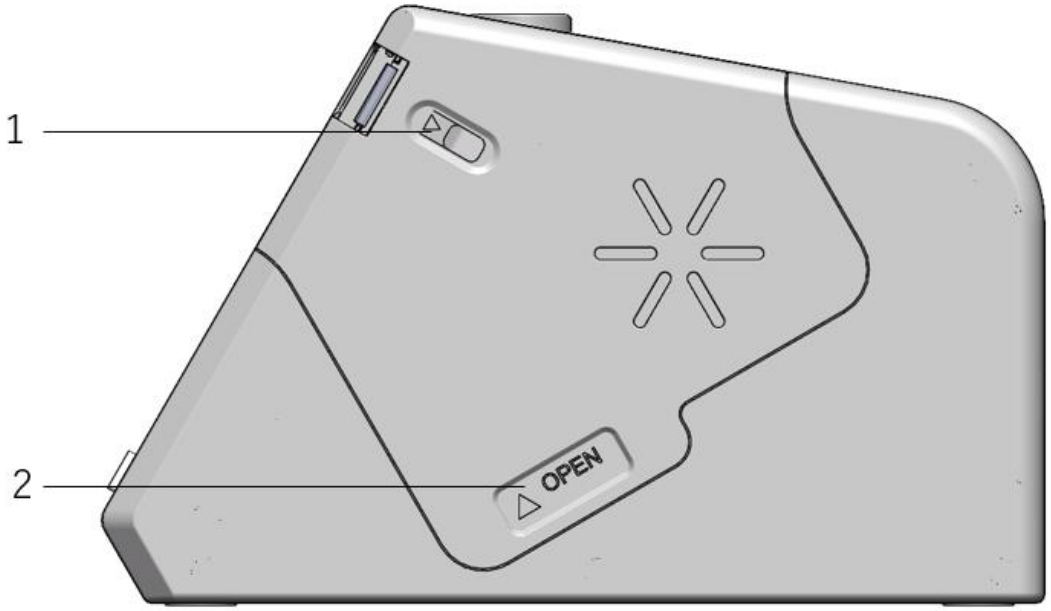

No.	Name	Description
1	Attachment Release Switch	Used when removing an attachment from the device.
2	Panel Latch	Operating mechanism for opening and closing the panel.

2-3-3 Rear View

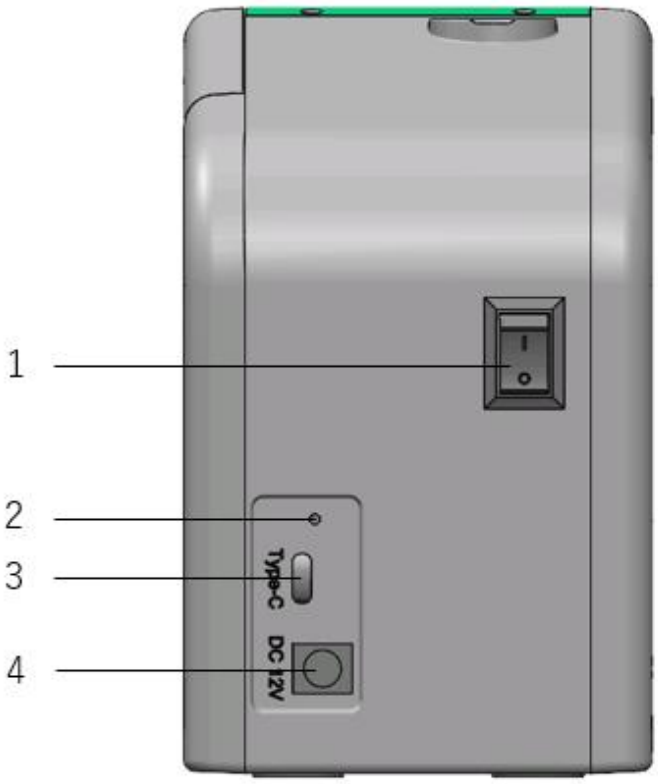

No.	Name	Description
1	Power Switch	Turns the device power ON and OFF.
2	Power Cord Inlet	Connection point for the power cord.
3	USB Type-C Port	Factory Service Only (Do Not Use)
4	Reset Hole	Factory Service Only (Do Not Use)

CAUTION

The USB Type-C port and reset hole are for maintenance and development use only. Do not operate them. Doing so may cause malfunction or improper operation of the device.

3. Basic Operation and Settings

3-1 Pre-Operation Check

Before operating this Product, make sure that the following items are available.

- CLETOP-S Replacement Cartridge (White)
- A supplied attachment suitable for the connector being cleaned
- Power cord provided with this Product

3-2 Startup Procedure

Before first use, perform the setup by following the steps below.

👉 **Procedure**

1. Connect the Power Cord to the Power Cord Inlet on the Rear Panel, and then insert the power plug into a wall outlet.
2. Set the Power Switch to ON.
   → The startup screen will be displayed on the LCD.

3. Confirm that the LCD switches to the main screen.
   - At this point, the error icon is flashed because no cartridge has been installed yet. This is normal and does not indicate a problem.
   - Until a cartridge is installed, mode settings cannot be changed and the A and B Buttons are disabled.

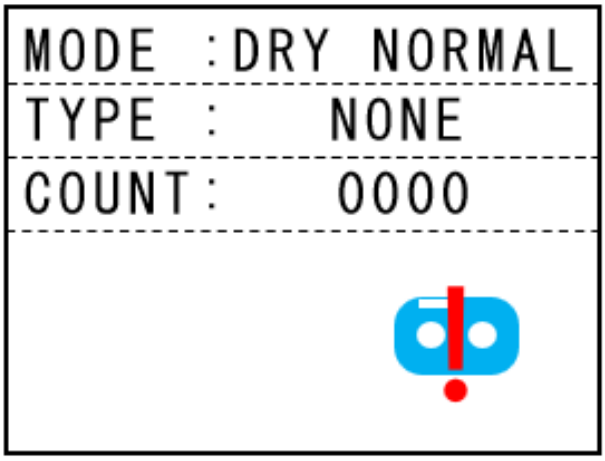

WARNING

Always connect the grounding terminal of the power cord.
Failure to do so may result in electric shock, fire, or personal injury.

CAUTION

Before switching on the device, ensure that no hands, fingers, or objects are near the moving parts.
During operation, always keep hands and fingers away from all moving parts.

3-3 Installing the Cartridge

Make sure the device is powered on before installing the cartridge.

👉 **Procedure**

1. Open the Side Panel.
2. Remove a new cartridge from its packaging and pull out approximately 60 mm (about the width of four fingers) of the cleaning cloth, ensuring that it is taut and free of slack.

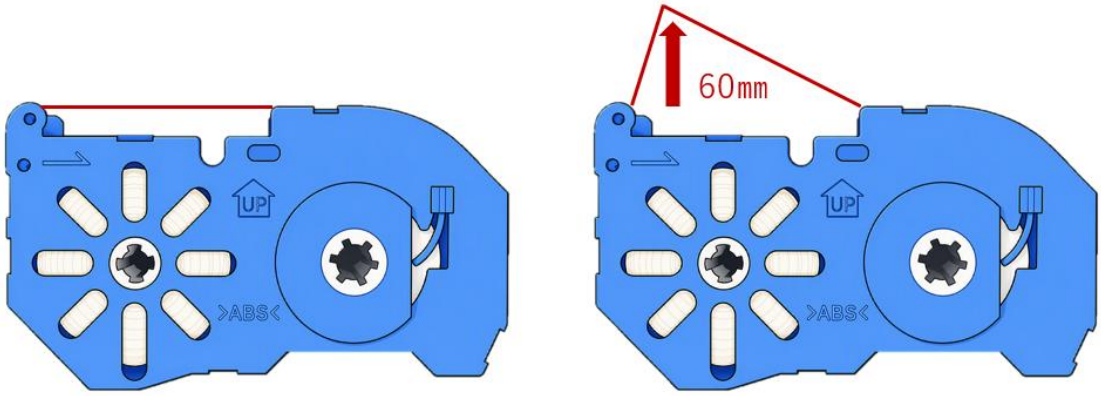

3. Install the cartridge, ensuring that the cleaning cloth is routed along the path shown in the figure. Then close the Side Panel.

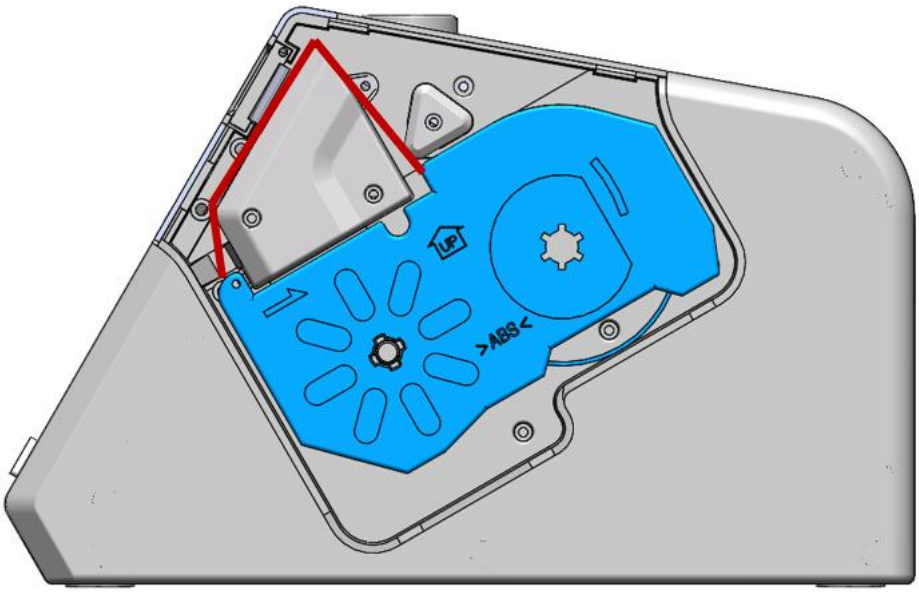

- If there is no liquid in the Tank, the cartridge can be installed more easily by tilting the unit during installation.
  The cartridge may be replaced with bare hands. Any portion of the cleaning cloth that becomes contaminated during handling will be automatically wound up during operation.

- The cartridge may not fit into place if it becomes caught on the shaft inside the unit. In such cases, rotate the cartridge spool slightly as shown in the figure before installing it.

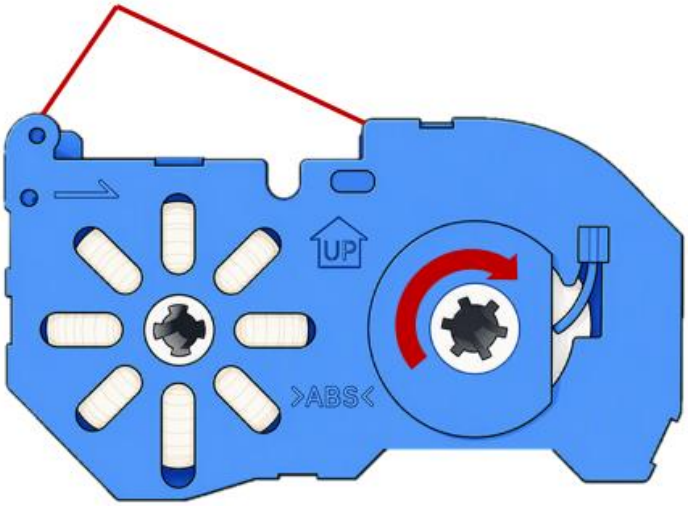

4. After the cartridge has been installed, a confirmation screen will appear asking whether you want to reset the cartridge Usage Count (the number displayed as “COUNT” on the main screen).
   - If you have replaced the cartridge with a new one, select “YES” (A Button). In this case, the cartridge Usage Count will be reset.
   - If the cartridge being installed is one that was temporarily removed, select “NO” (B Button). The cartridge Usage Count will remain unchanged.

5. After either option is selected, the cleaning cloth is automatically wound forward, and the display returns to the main screen.

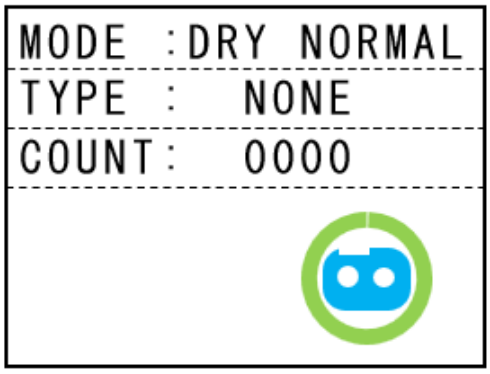

CAUTION

Regardless of whether "YES" or "NO" is selected on the cartridge count reset confirmation screen after cartridge replacement, the cleaning cloth is automatically wound to prevent slack inside the unit.

Keep hands and fingers away from the moving parts during the winding operation. Failure to do so may result in injury.

3-4 Cartridge Replacement Confirmation Screen

The cartridge replacement confirmation screen can also be displayed from the main screen by pressing and holding the A and B Buttons simultaneously, even when the cartridge has not been replaced.

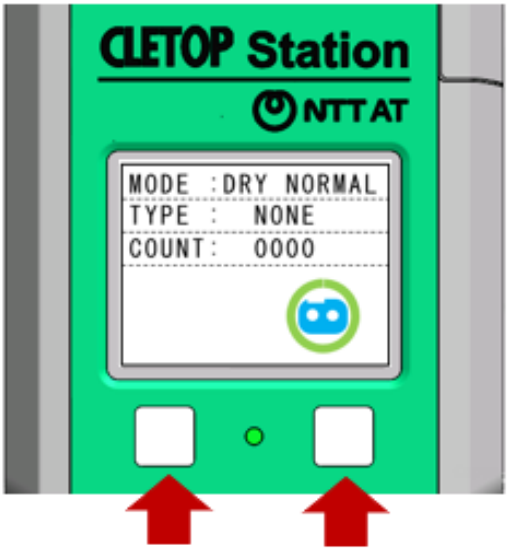

When to Use This Function

- If the cartridge is replaced while the power is OFF
- To remove slack from the cleaning cloth
- If a new cartridge has been installed but the Usage Count was not reset

👉 Operating Procedure

1. On the main screen, press and hold the A and B Buttons simultaneously.
2. The cartridge replacement confirmation screen appears.
3. Select “YES” or “NO” as required.

Selecting “YES” resets the cartridge Usage Count.
Selecting “NO” leaves the cartridge Usage Count unchanged.
Whether “YES” or “NO” is selected, the cleaning cloth is automatically wound forward to prevent slack inside the device.

CAUTION

If the cleaning cloth is not installed correctly, the device may not operate properly. Do not use the device if the cloth is not routed along the correct path, or if the cloth is twisted or slack.

3-5 Installing the Attachment

Select and install the attachment that matches the connector to be cleaned.

👉 **Procedure**

1. Remove the attachment to be used from the attachment case.
2. Insert the attachment into the attachment mount until it clicks into place.

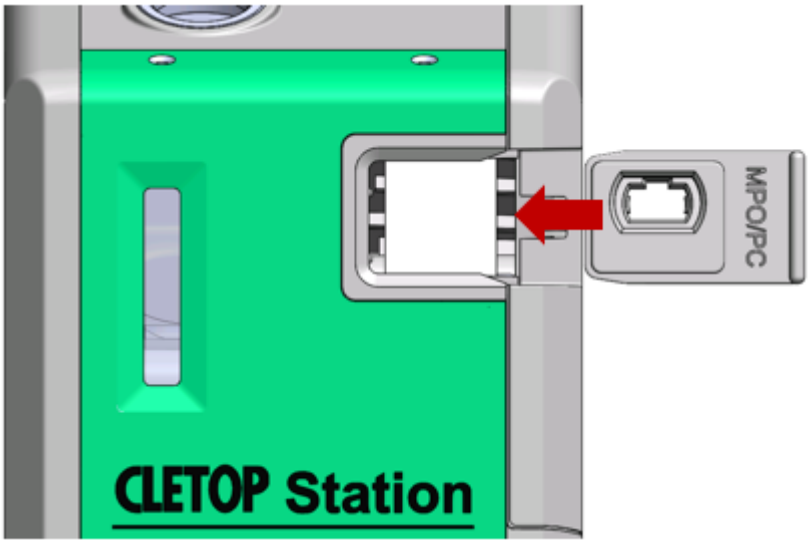

3. Verify that the LCD displays the type of attachment that has been installed.

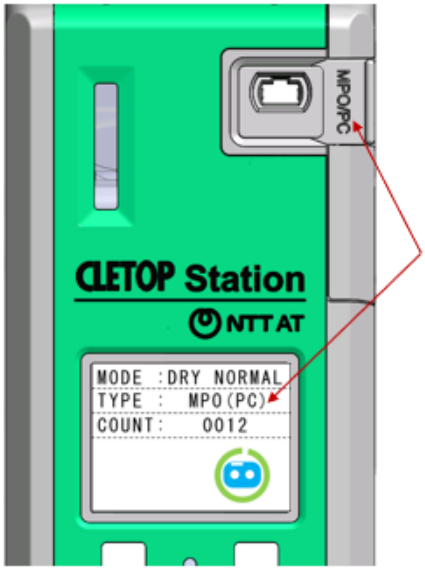

👉 **Removal Procedure**

1. Slide the Attachment Release Switch located on the side of the device.
2. Hold the Attachment Release Switch in the slid position and pull the attachment out in the direction of the arrow.

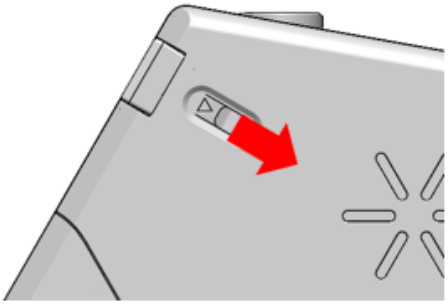

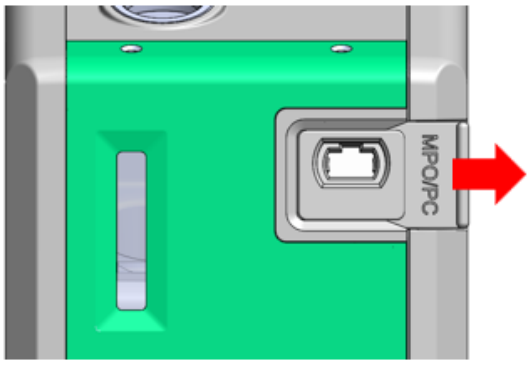

3-6 Mode Settings

Users can select the cleaning mode according to their application.
However, mode settings can be changed only when a cartridge is installed.
If no cartridge is installed, the A and B Buttons are disabled and mode settings cannot be changed.

3-6-1 Switching Cleaning Modes (DRY / WET)

The mode can be changed by pressing the A Button.

Mode	Description
DRY Mode	Dry Cleaning
WET Mode	Wet Cleaning

3-6-2 Switching Cleaning Intensity (NORMAL / HARD)

The cleaning intensity can be changed by pressing the B Button.

Intensity	Description
NORMAL	Standard Cleaning
HARD	Intensive Cleaning

3-7 Preparing for WET Mode

Before operating in WET Mode, prepare distilled water. Use only distilled water. Do not use any other liquids.

👉 Filling Procedure

1. Remove the cap from the Filling Port and pour distilled water into the Tank.

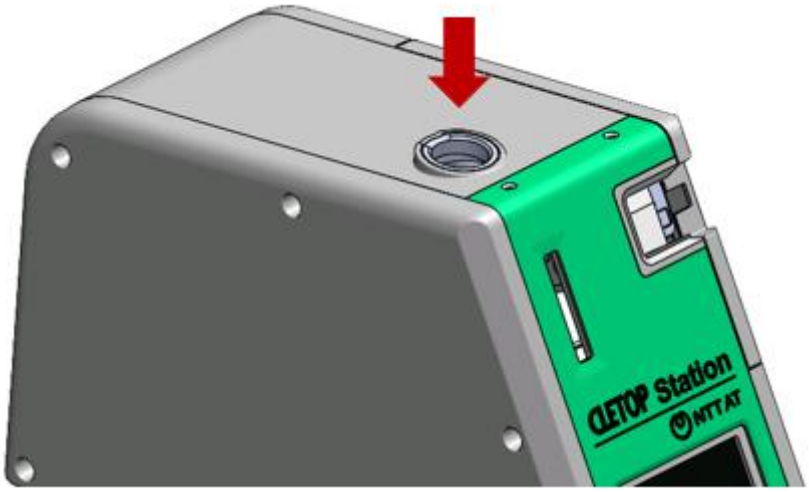

2. Check the amount of distilled water in the tank using the Liquid Level Inspection Window.

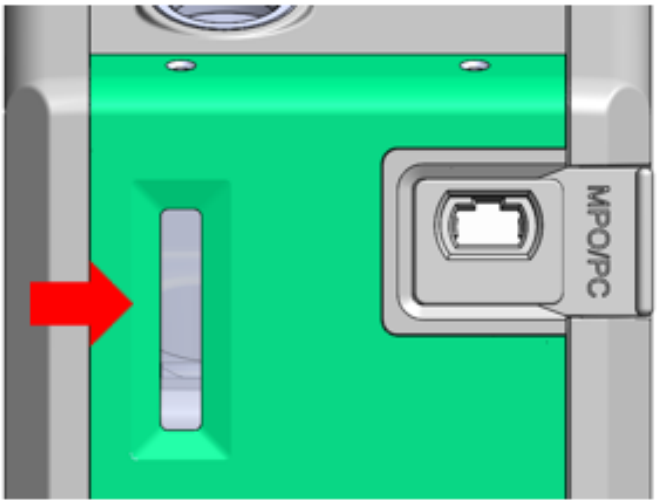

3. Securely attach the cap to the Filling Port.

👉 Draining Procedure

1. Turn the power OFF.
2. Remove the cap from the Filling Port.
3. Point the Filling Port downward and slowly tilt the Main Unit to drain distilled water from the Tank.
4. After draining is complete, reinstall the cap on the Filling Port.

WARNING

Be sure to drain distilled water from the Tank after each day of use. Failure to do so may result in mold growth or equipment malfunction.

CAUTION

Always drain distilled water from the tank before transporting the device. Failure to do so may cause equipment malfunction.

4. Basic Operation (Cleaning Procedure)

4-1 Basic Cleaning Procedure

The basic procedure for cleaning with this product is outlined below.

👉 **Procedure**

1. Confirm that the power is turned ON.
2. Verify that the installed attachment corresponds to the Type indicated on the LCD Display.

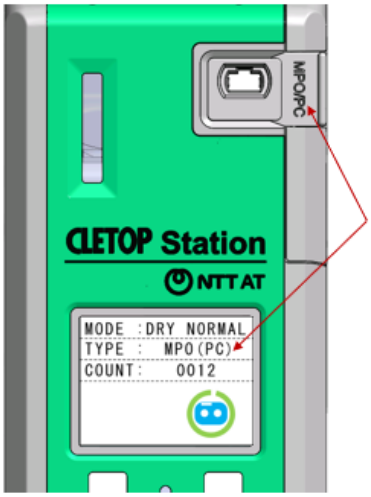

3. Select the desired cleaning mode (DRY/WET) and cleaning intensity (NORMAL/HARD).
4. Insert the connector into the cleaning port and push it all the way in until it reaches the stop position.

5. The LCD displays a cleaning icon and the LED indicator illuminates, indicating that the cleaning process has started.

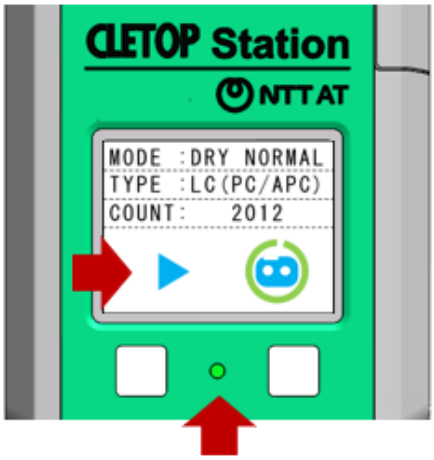

6. When the cartridge winding sound stops, the LCD icon disappears, and the LED indicator turns off, the cleaning process is complete.
7. Remove the connector.

CAUTION

When inserting a connector, always hold and operate the connector by its housing. With SC and MPO connectors, pushing on the cable or boot may prevent the connector from being inserted to the correct position. Always hold the housing and firmly push the connector in until it reaches the stop position.

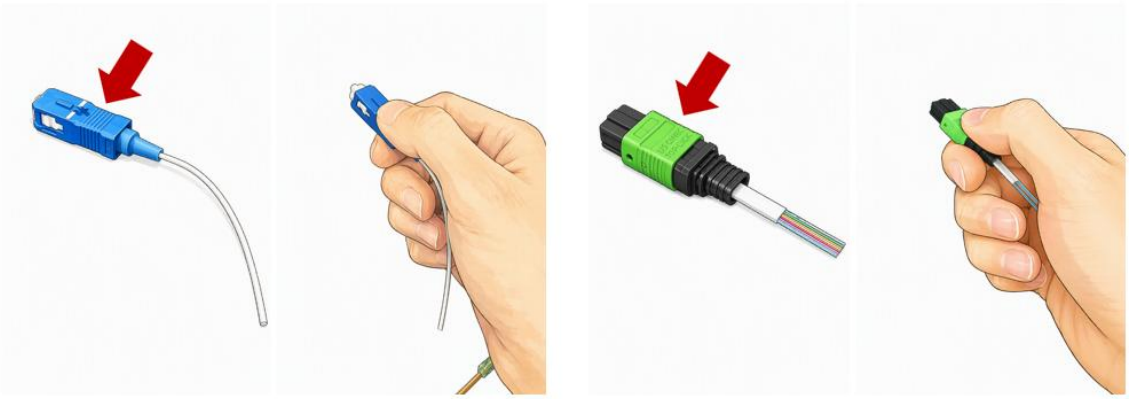

4-2 Operating Tips by Mode

4-2-1 DRY Mode

Dry cleaning mode. Used to remove fingerprints and oily contamination.

Key Points

Distilled water is not required.

4-2-2 WET Mode

Wet cleaning mode. Used for heavily contaminated connectors or when enhanced cleaning effectiveness is required.

Key Points

- Ensure that the Tank is filled with distilled water before operating in WET Mode.
- The device cannot be used if there is insufficient distilled water in the Tank.

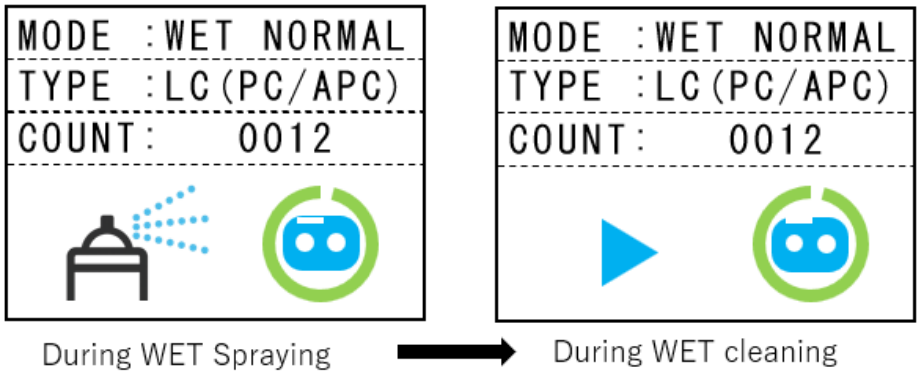

CAUTION

In WET Mode, cleaning starts after the cleaning cloth has been sprayed with distilled water.
After the connector is inserted, it may take a few seconds before cleaning begins. Do not remove the connector during this time. Keep the connector fully inserted until it reaches the stop position.

4-3 Precautions During Cleaning

For safe and effective cleaning, observe the following precautions.

- Make sure the connector is firmly inserted until it reaches the stop position.
- Do not insert the connector using excessive force.
- Do not withdraw the connector until the cleaning process is complete.
- Always use the appropriate attachment for the connector being cleaned.

4-4 If the Unit Does Not Operate

Under the following conditions, the device may not function correctly.

- No cartridge is installed in the device.
- Insufficient cleaning cloth remains in the cartridge (the cloth has been fully consumed).
- The installed attachment is not correctly seated in the device.
- (WET Mode) There is insufficient distilled water in the Tank.
- Sensor Calibration is required. For details, see Section 6-2.

→ Check the above conditions and retry the operation.

5. Display and Status Indicators (LCD)

5-1 Screen Overview

The LCD display provides information on the current operating status and settings of this Product. Refer to the information displayed on the screen to check the status of the unit.

5-2 Main Screen Layout

After the power is turned ON, the main screen is displayed following the Startup Screen.

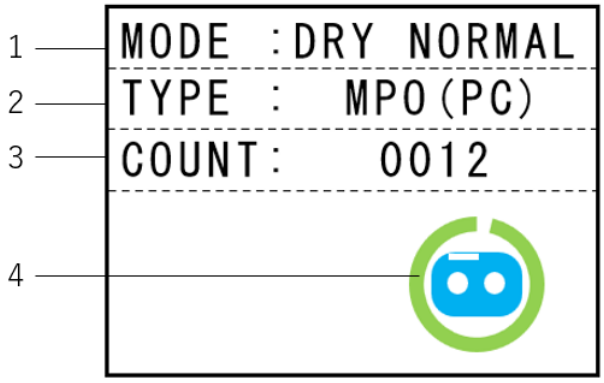

The main screen displays the following information:

No.	Display Item	Description
1	MODE	Current cleaning mode
2	TYPE	Type of the installed attachment
3	COUNT	Number of cleaning cycles performed using the current cartridge
4	Cartridge Status	Remaining cartridge life

5-3 Cartridge Remaining Level Indicator

The remaining cartridge life can be checked by the color and status of the cartridge indicator.

Indicator	Status	Display	Description
	Normal	Green	Sufficient cartridge life remaining
	Caution	Yellow	Cartridge life is running low
	Warning	Red	Cartridge life is very low
	Error	Flashing + Warning Symbol	No cartridge life remaining

5-4 Operating Status Indicators

Status indicators are displayed while a cleaning operation is in progress or when a specific operating mode is active.

Indicator	Display	Status
	Cleaning Indicator	Cleaning in progress
	WET Mode Indicator	WET Mode operation active

5-5 Warning Indicators

Warning indicators are displayed when the unit detects an abnormal condition.

Indicator	Warning	Cause	Corrective Action
	Insufficient distilled water	Distilled water level is too low.	Refill distilled water.
	Cartridge not installed or exhausted	No cartridge is installed, or the cartridge has reached the end of its service life.	Replace the cartridge or install it correctly.

6. Maintenance

6-1 Maintenance Overview

To ensure stable and reliable operation of this product, perform regular maintenance. The primary maintenance tasks are listed below.

- Sensor calibration
- Cleaning of the ultrasonic transducer

6-2 Sensor Calibration

This product incorporates a sensor that detects connector insertion. If the unit does not operate even when a connector is inserted correctly, perform sensor calibration.

Calibration is performed for each connector category. When calibration is completed for a connector category, the calibration settings for all corresponding attachment types are updated.

Example:

Calibration of the 1.25 mm Ferrule / LC Connector category can be performed using either an LC connector or a 1.25 mm ferrule. Once completed, the calibration data will be applied to both LC connector attachments (PC/APC) and 1.25 mm ferrule attachments (PC/APC).

Connector Category	**Applicable Attachments**	
1.25 mm Ferrule / LC Connector	LC Connector (PC/APC)	1.25 mm Ferrule (PC/APC)
2.5 mm Ferrule / SC Connector	SC Connector (PC/APC)	2.5 mm Ferrule (PC/APC)
LC-Duplex Connector	LC-Duplex Connector	
MT Ferrule / MPO Connector	MPO Connector (PC)	MPO Connector (APC)
	MT Ferrule (PC)	MT Ferrule (APC)

◆ **Calibration Sequence**

Calibration is performed separately for each connector category. After entering Calibration Mode, the categories can be calibrated in the following order. Categories that do not require calibration may be skipped.

- 1.25 mm ferrule / LC connector
- 2.5 mm ferrule / SC connector
- LC-Duplex connector
- MT ferrule / MPO connector

The calibration workflow is as follows:

1. Enter Calibration Mode
2. Select Connector Category
3. Install Attachment
4. Calibration Process 1
5. Insert Connector
6. Calibration Process 2
7. Save Result

👉 **Calibration Procedure**

1. **Enter Calibration Mode**

With the power switched OFF, press and hold both the A and B Buttons simultaneously while turning the power ON. Continue holding both buttons until the Calibration Mode screen appears. Release the buttons when the screen is displayed.

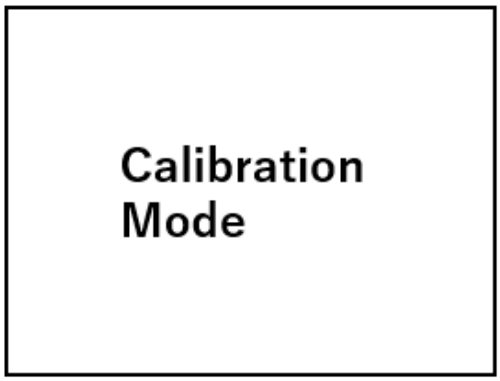

2. **Select the Connector Category**

   The first screen displayed is for 1.25 mm Ferrule / LC Connector. The following options are available:

   - OK (A Button): Calibrate the displayed connector category.
   - Cancel (B Button): Skip to the next connector category.

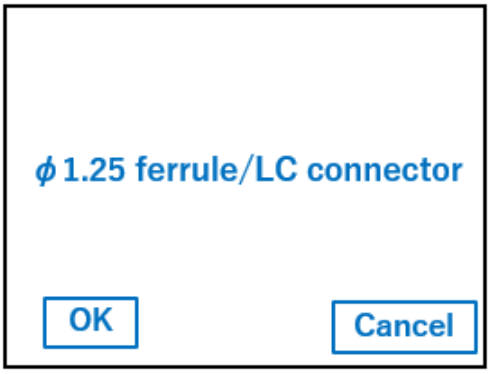

3. **Install the Attachment**

   After selecting OK, an attachment installation instruction screen is displayed. Install the attachment corresponding to the connector to be calibrated, then proceed to the next step.

   - Back (A Button): Return to the previous screen.
   - Next (B Button): Proceed to the next step.

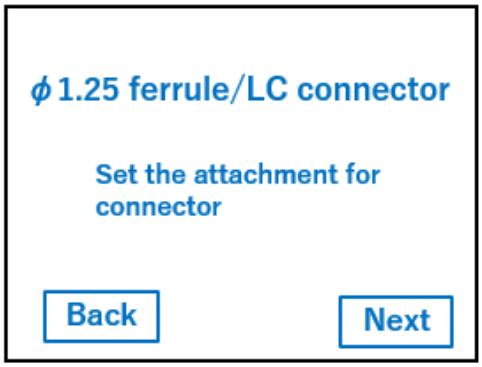

4. **Calibration Process 1**

   A progress screen displaying “Wait a second” appears. An indicator fills gradually while the calibration process runs. Do not touch the unit until the process is complete.

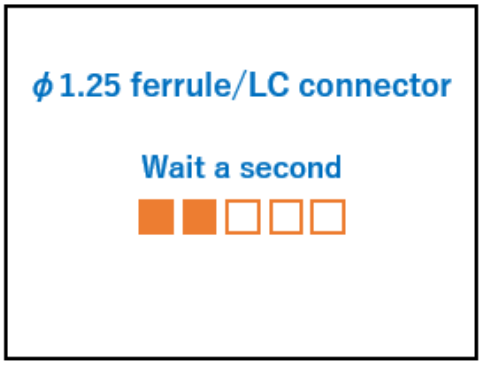

5. **Insert the Connector**

When the process is complete, “Insert connector” is displayed. Insert the connector to be used for calibration until it reaches the stop position, then select Next.

- Back (A Button): Return to the attachment installation screen.
- Next (B Button): Proceed to the next step.

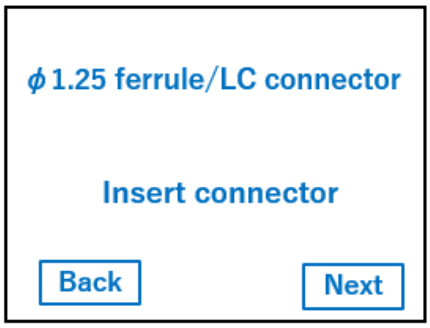

6. **Calibration Process 2**

A progress screen displaying “Wait a second” appears again. Keep the connector fully inserted until the process is completed.

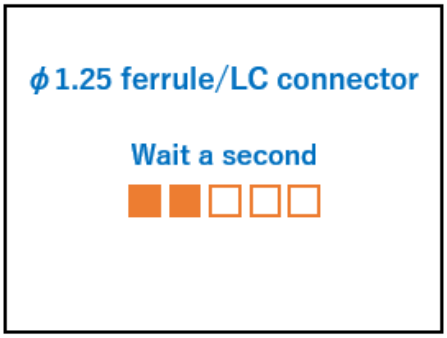

7. **Save the Result**

When calibration is complete, the message “Done Accept it?” is displayed.

- Yes (A Button): Save the calibration result.
- No (B Button): Repeat the calibration procedure.

If Yes is selected, the settings are saved and the next connector category selection screen is displayed. If No is selected, the procedure returns to the connector category that was being calibrated.

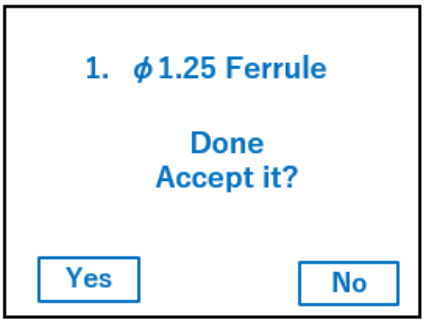

The same procedure can then be used to calibrate the following categories:
2.5 mm ferrule / SC connector, LC-Duplex connector, MT ferrule / MPO connector

CAUTION

During **Calibration Process 2**, keep the connector fully inserted until it reaches the stop position.
Always use the attachment corresponding to the connector being calibrated.
Use an actual connector that is normally used in operation for calibration.

CAUTION

Use only connectors that conform to the IEC mating-interface standards for calibration.
If a non-compliant connector is used, the following issues may occur:

- The operating threshold may not be reached when a compliant connector is used.
- The sensor may not respond correctly.

6-3 Cleaning the Ultrasonic Transducer

In WET Mode, distilled water is supplied to the cleaning cloth by an ultrasonic transducer located along the cloth path. The cleaning operation is performed after the cloth has been moistened with distilled water.

If dirt or deposits accumulate on the ultrasonic transducer, the amount of distilled water delivered may decrease, resulting in reduced cleaning performance. Perform cleaning periodically.

■ When Maintenance Is Required

Perform this maintenance in the following cases:

- When cleaning performance in WET mode appears to have deteriorated.
- When the unit has been used continuously for more than one month since the last cleaning.

👉 Cleaning Procedure

1. **Prepare the Unit**

   Remove the attachment and cartridge. Turn the power OFF and disconnect the power cord. Drain all distilled water from the tank.

2. **Remove the Front Panel**

   Remove the T6 screws located on the top of the unit and detach the front panel.

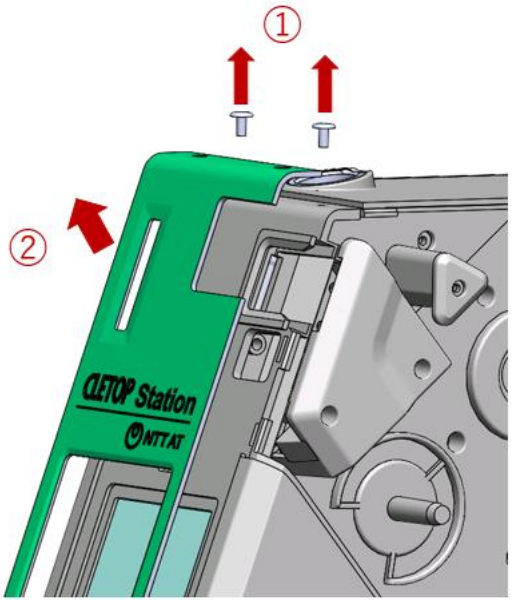

3. **Clean the Ultrasonic Transducer**

Once the front panel is removed, the ultrasonic transducer will be visible inside the unit. Moisten a cotton swab with a small amount of citric acid solution and gently wipe the surface of the ultrasonic transducer.

4. **Reassemble the Unit**

Hook the lower tabs of the front panel into place and secure the panel using the original screws through the two upper mounting holes.

WARNING

Always turn the power OFF and disconnect the power cord before performing maintenance. Ensure that no distilled water remains in the tank before cleaning.

CAUTION

Do not scrub the ultrasonic transducer forcefully during cleaning, as this may cause damage. Make sure that no moisture remains on the surface of the ultrasonic transducer after cleaning.

7. Troubleshooting

If the unit does not operate properly, check the following items.
Many issues can be resolved through simple corrective actions.

7-1 Operation Issues

Symptom	Cause	Corrective Action
The unit does not operate when a connector is inserted.	The connector is not fully inserted.	Firmly insert the connector until it reaches the stop position.
	The sensor cannot correctly detect connector insertion.	Perform sensor calibration.
	The cartridge is not installed correctly.	Reinstall the cartridge correctly.
The unit operates intermittently when a connector is inserted.	The sensor cannot correctly detect connector insertion.	Perform sensor calibration.

7-2 WET Mode-Related Issues

Symptom	Cause	Corrective Action
A distilled water warning is displayed.	Insufficient distilled water.	Refill distilled water.
Water leakage occurs.	The unit is tilted.	Place the unit on a level surface.

7-3 Cartridge-Related Issues

Symptom	Cause	Corrective Action
A cartridge warning is displayed.	No cartridge is installed, or the cartridge is not installed correctly.	Install the cartridge correctly.
	The cartridge has reached the end of its service life.	Replace it with a new cartridge.
Cleaning performance is unsatisfactory.	A non-genuine cartridge is being used.	Use a genuine CLETOP-S Replacement Cartridge (White).

7-4 If the Problem Persists

If the issue cannot be resolved after performing the actions above, check the following:

- Confirm that power is being supplied correctly.
- Check that there is no damage to the power cord.
- Verify that the operating environment is within the specified conditions (e.g., no excessive temperature or condensation).

If the problem persists, contact the authorized distributor from whom you purchased this Product.

8. Specifications

8-1 Product Specifications

The main specifications of this product are as follows.

■ Electrical Specifications

Item	Specification
Rated Input Voltage	AC 100–240 V
Frequency	50/60 Hz
Rated Input Current	1.0 A
Output Voltage	DC 12 V
Output Current	3.0 A
Power Supply	AC Adapter

■ Environmental Requirements

Item	Requirement
Operating Environment	Indoor use only
Temperature	10–30°C
Humidity	30–70% RH (non-condensing)
Installation Condition	Horizontal installation required

■ Permitted Liquid for WET Cleaning Mode

Item	Specification
Permitted Liquid	Distilled water only

■ Consumables

Item	Specification
Cartridge	CLETOP-S Replacement Cartridge (White)

8-2 Compatible Connectors

This product supports the following connector types through interchangeable attachments.

- 1.25 mm Ferrule (PC/APC)
- 2.5 mm Ferrule (PC/APC)
- MT Ferrule (PC/APC)
- LC Connector (PC/APC)
- LC-Duplex Connector (PC/APC)
- SC Connector (PC/APC)
- MPO Connector (PC/APC)

Do not use this product with unsupported connector types.

8-3 Notes on Specifications

- Specifications are subject to change without prior notice.
- Operation is not guaranteed when this Product is used outside the specified conditions.

---

9. Warranty

The warranty period for this product is one (1) year from the date of delivery.
If a failure caused by a manufacturing defect occurs during the warranty period under normal use in accordance with this Instruction Manual, we may, at our discretion, provide appropriate corrective action free of charge, including repair, replacement of parts, or replacement of this Product.
However, the following are not covered by this warranty, even during the warranty period:

- Failure or damage occurring after this Product has exceeded the cleaning-life limit specified by us (guideline: 100 cartridges used).
- Failure or damage resulting from use in a manner not described in this Instruction Manual.
- Failure or damage caused by modification, disassembly, or improper handling by the customer.
- Failure or damage caused by dropping, impact, water ingress, or similar external factors.
- Failure or damage caused by fire, earthquake, lightning, or other natural disasters.
- Replacement of consumables, including cartridges.

10. Manufacturer Information

Manufacturer

NTT Advanced Technology Corporation
Material and Nanotechnology Business Headquarters,
Optical Business Division

NTT Musashino R&D Center, 3-9-11, Midoricho, Musashino-shi,
Tokyo 180-0012 , Japan
Tel: +81-422-39-8934

For inquiries regarding this product, please contact the authorized distributor from whom you purchased this Product.

Optical Fiber Connector Cleaner CLETOP Station
Instruction Manual

Version 1.1 (October 2026)

The contents of this manual are subject to change without prior notice.